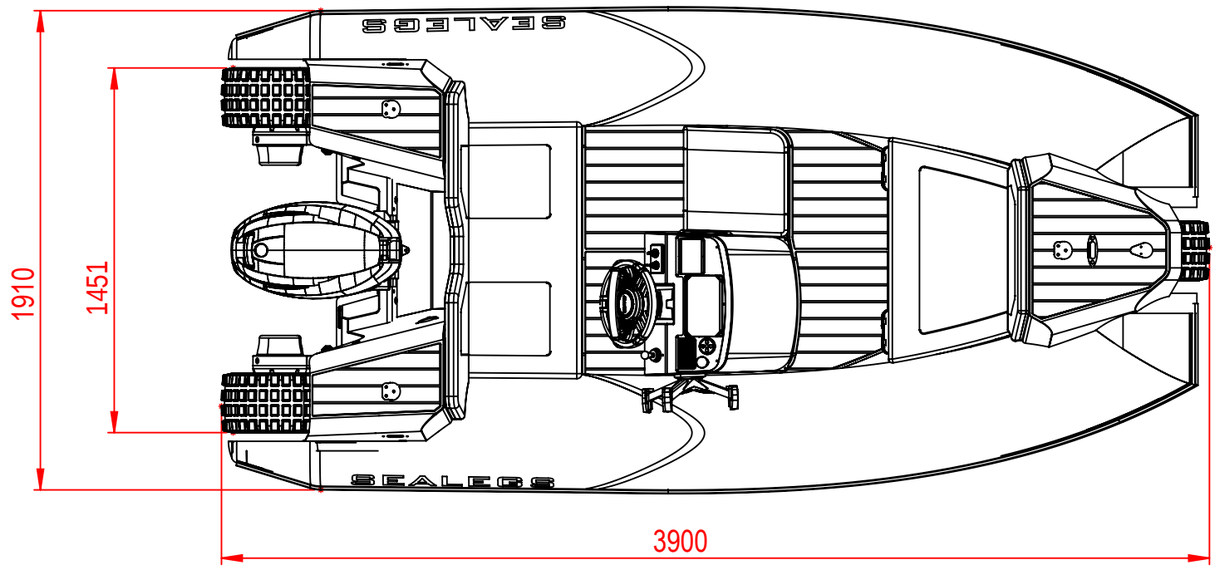

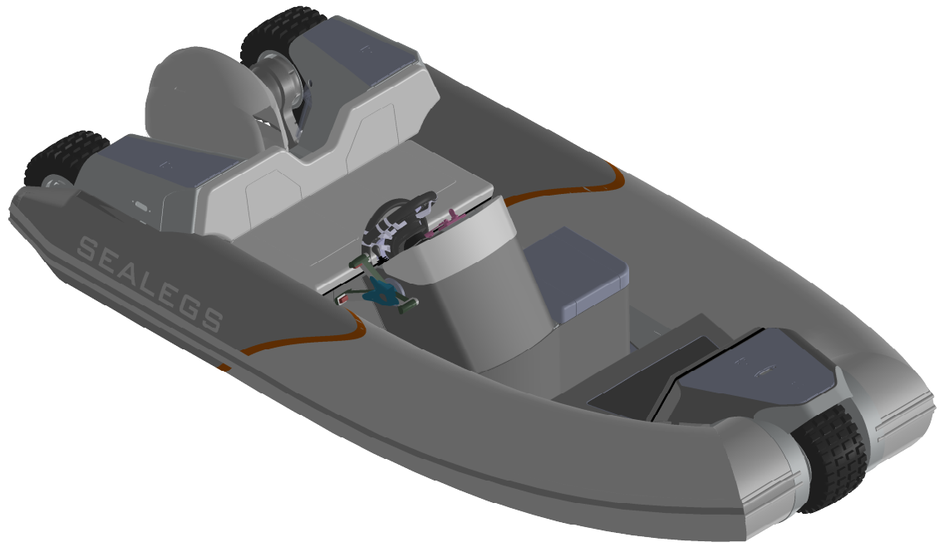

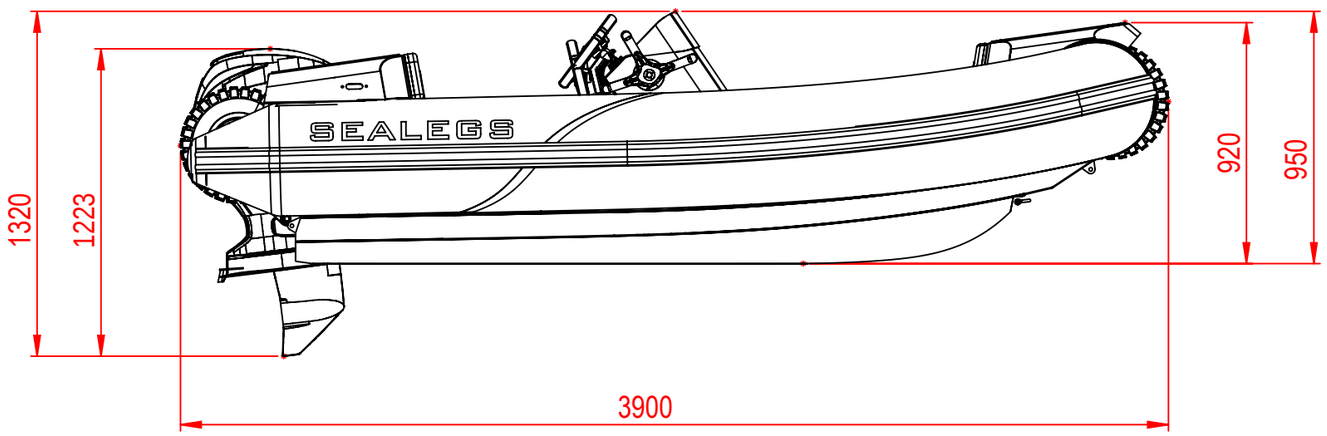

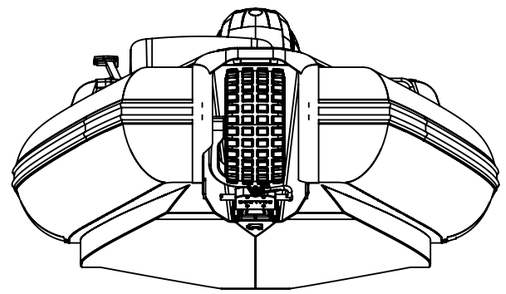

NOTE:

SEALEGS®

BE AMPHIBIOUS

Address: 16B Parkhead Place, Albany, Auckland, New Zealand **Ph:** 09 414 5542 **Fax:** 09 414 5546
Email: info@sealegs.com

TITLE: 3TE TOP LEVEL ASSEMBLY

CREATED BY:	MIMI POST 28, November 2023	SHEET 1 OF 2
		SCALE (A3) 1:25
REVISED BY:	MIMI POST 28, November 2023	REV. / PCN.
		DWG NO:

É Copyright Sealegs International Ltd. This drawing and design are the sole property of Sealegs International Ltd. Information contained in this drawing may not be used or reproduced for any purpose without express prior written permission from Sealegs International Ltd. All rights reserved.

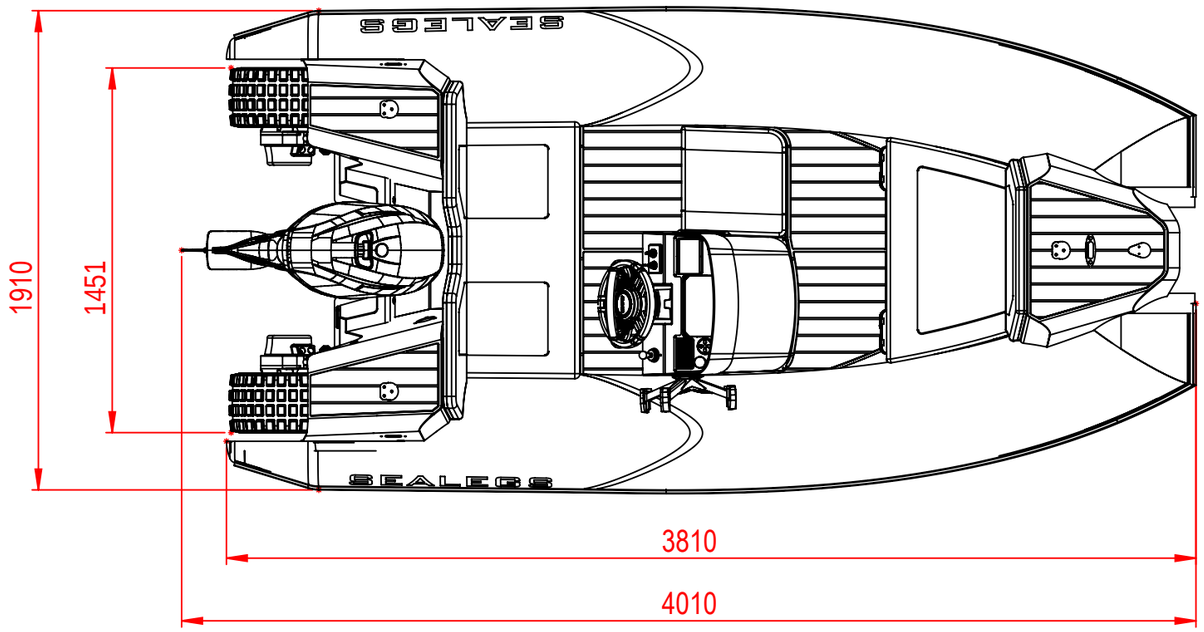

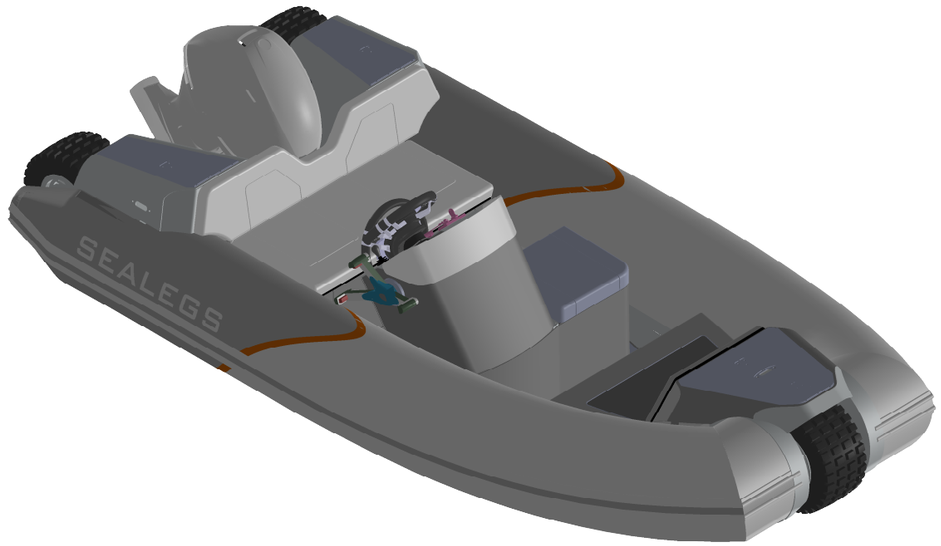

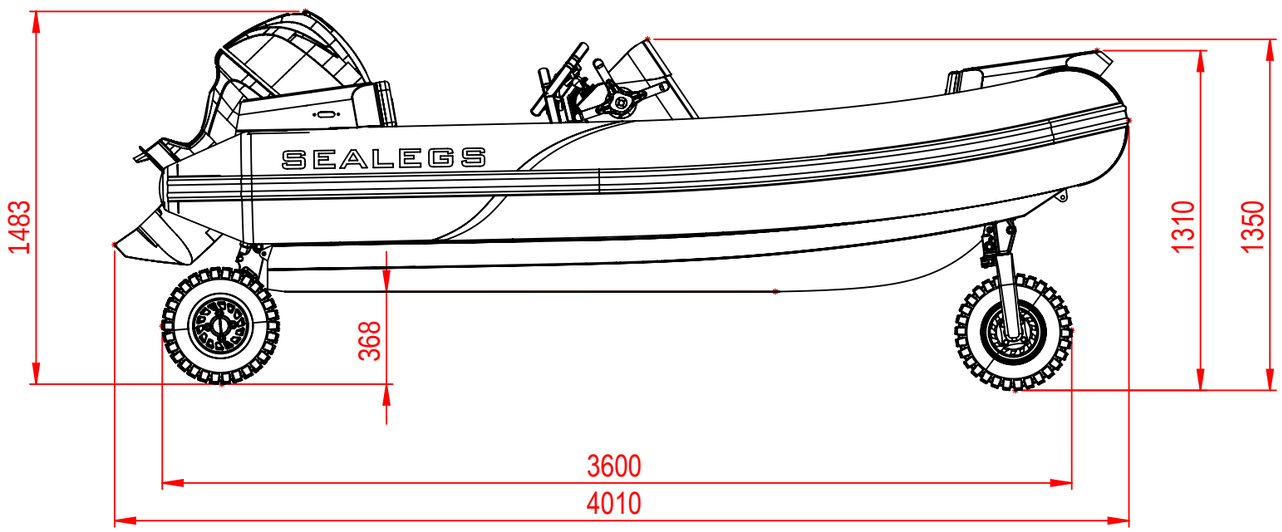

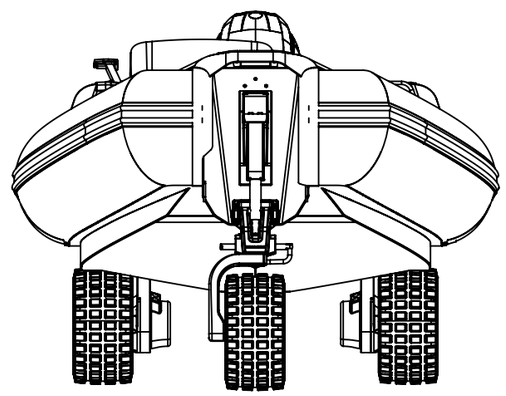

NOTE:	SEALEGS® BE AMPHIBIOUS **Address:** 16B Parkhead Place, Albany, Auckland, New Zealand **Ph:** 09 414 5542 **Fax:** 09 414 5546 **Email:** info@sealegs.com	TITLE: 3TE TOP LEVEL ASSEMBLY CREATED BY: MIMI POST 28, November 2023 SHEET 2 OF 2 SCALE (A3) 1:25 REVISED BY: MIMI POST 28, November 2023 REV. PCN. DWG NO:

É Copyright Sealegs International Ltd. This drawing and design are the sole property of Sealegs International Ltd. Information contained in this drawing may not be used or reproduced for any purpose without express prior written permission from Sealegs International Ltd. All rights reserved.